Общество с ограниченной ответственностью
Системы Пожаротушения

Gas fire extinguishing device
TU 28.29-036-69229785-2018

«Eol 2A025» ☐
«Eol 2R025» ☐
«Eol 2A050» ☐
«Eol 2R050» ☐
«Eol 3A100» ☐
«Eol 3R100» ☐

PASSPORT & OPERATION MANUAL

СПТГ.700225.000 ПС

Добровольная сертификация

Sankt-Petersburg

1. DESIGNATION

1.1. The device of gas fire extinguishing (hereinafter "GFED") "Eol 2A025", " Eol 2A050", "Eol 3A100" with axial gas outflow and “Eol 2R025", "Eol 2R050", "Eol 3R100” with radial gas outflow is designed to extinguish in conditionally sealed volume fires of the following Classes:

- subclass A2 - combustion of solids not accompanied by smoldering;
- Class B – combustion of flammable liquids;
- Class C - combustion of gases;
- Class E - fires occurring in rooms with cables, electrical installations and electrical equipment under voltage up to 1000V.

The predominant area of application – protection of boards with electrical equipment, cabinets with electronic equipment for server, process control systems, power plants and substations, compartments with electrical equipment, with electric motors, pumps and other technological equipment.

1.2. GFED has climatic execution U category 2.1 according to GOST 15150-69. Relative humidity - no more than 98% at 25°C°. Operating temperature - from -50 C up to +50˚C. Group of mechanical performance according to GOST 30631 – M 25, M28, M29, M 30, M31.

1.3. Gas produced by the operation of the device does not contain ozone-depleting substances.

1.4. The quantity and composition of the main products of combustion generated during operation of the device as a percentage by volume: CO_2 - 63.3%; H_2O - 25.63%; N_2 -10.29%; CH_4 - 0.66%; H_2 - 0.094%; CO - 0.001%; NH_3 - 0.0006%.

2. TECHNICAL CHARACTERISTICS

Table 1

Name of the indicator, unit of measurement	Value					
	EoI 2A025	**EoI 2R025**	**EoI 2A050**	**EoI 2R050**	**EoI 3A100**	**EoI 3R100**
1. The maximum volume of the conditionally sealed compartment in which GFAD provides extinguishing: - model fires of class B, m3 - model fires of subclass A2, m3	 0,25 0,25		 0,5 0,5		 1,0 1,0	
2. Inertia response, sec, no more	10					
3. Response time of the device at the lower limit operating temperature, sec, not more than	23	10	23	10	23	10
4. GFED working time (duration of supply of fire extinguishing gas) within the operating temperature, sec, no more than	30		30		45	
5. The time (duration) of the supply of extinguishing gas (operation of the gas extinguishing device) at the lower limit operating temperature, s, not more than	70		76	79	76	79
6. Overall dimensions, mm , no more: - length - diameter	 215 76	 192 76	 323 76	 292 76	 386 89	 328 89
7. Mass of GFED, kg	2,3 ±0,23	2,10 ±0,21	3,30 ±0,33	3,0 ±0,3	5,20 ±0,52	4,50 ±0,45
8. The distance along the length of the gas jet corresponding to temperatures, m, not more than: 200 °C 75 °C	 - 0,02	 0,025 0,090	 - 0,07	 0,025 0,090	 - 0,11	 0,03 0,10
9. Startup parameters (electric): - starting current value, A, not less than; - start circuit resistance, Ohm; - pulse duration, MS, not more than - starting voltage, V, no more; - guaranteed non-operation current (safe current control of the electrical circuit), A, not more than	 0,5 3,2÷4,2 20 26 0,1					
10. Scheme of connector contacts soldering	Scheme 1 for connector of RM14 type					

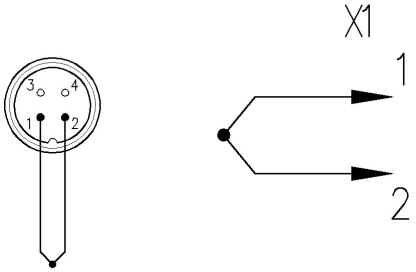

Electrical igniter
Scheme 1

3. SET OF DELIVERY

3.1. The GFED delivery set includes:

- GFED …….. …….....1 pc;
- starting device……..……..1 pc;
- brackets……..……2 pc;
- passport and operation manual…….. ……1 pc;
- packaging ..…….....1 pc.

Note: 1. As a starting device, various types of igniters can be used in the UGP: with electric, thermal or combined starting. The type of starting device is determined when ordered by the end user.

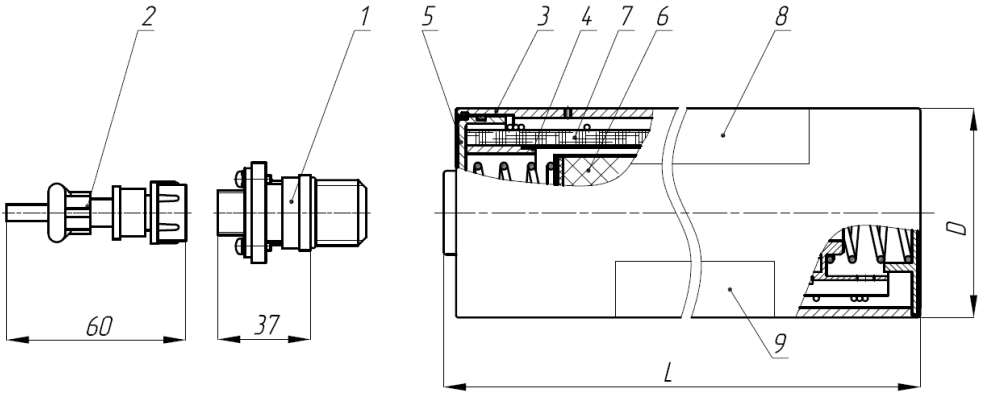

1. Starting device
2. Cable plug
3. Housing
4. Cassette
5. Cover
6. Gas-forming composition
7. Filter
8. Discharge outlets
9. Label

	EoI 2R025	**EoI 2R050**	**EoI 3R100**
D,mm	Ø76	Ø76	Ø89
L,mm	192	292	328

Fig.1. Device of gas fire extinguishing with radial gas outflow
(«EoI 2R025», «EoI 2R050», «EoI 3R100»)

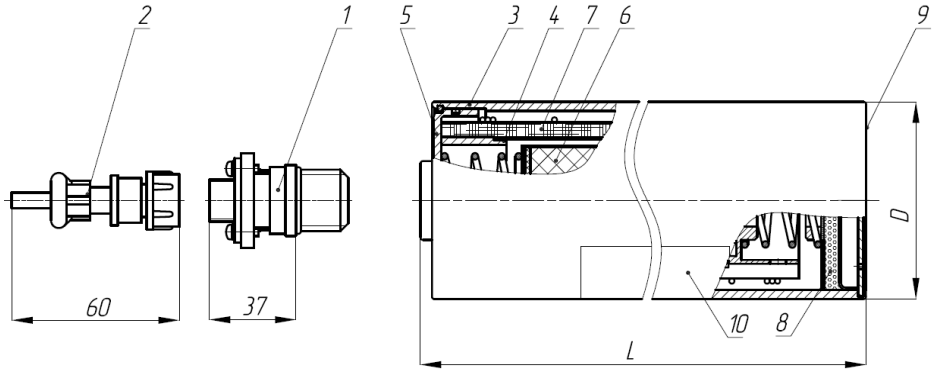

1. Starting device
2. Cable plug
3. Housing
4. Cassette
5. Cover
6. Gas-forming composition
7. Filter
8. Coolant
9. Discharge outlets
10. Label

	Eol 2A025	Eol 2A050	Eol 3A100
D, mm	Ø76	Ø76	Ø89
L, mm	215	323	386

Fig.2. Device of gas fire extinguishing with radial gas outflow («Eol 2A025», «Eol 2A050», «Eol 3A100»)

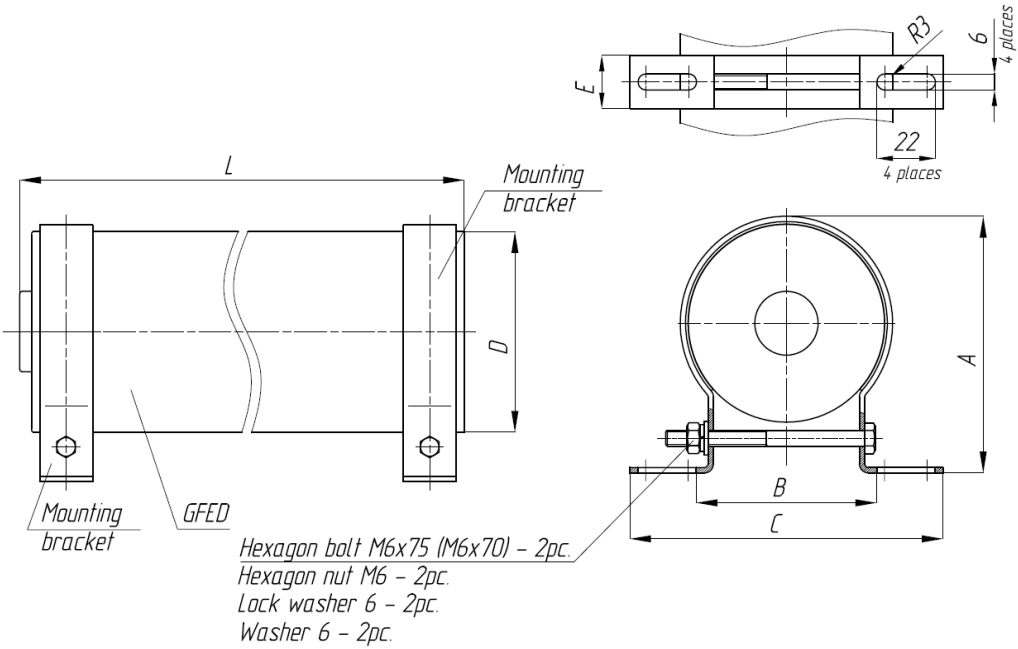

Dimension, mm		**Eol 2A025** **Eol 2R025**	**Eol 2A050** **Eol 2R050**	**Eol 3A100** **Eol 3R100**
A		96	96	115
B		70	70	74
C		120	120	124
E		20	20	30
D		Ø76	Ø76	Ø89
L	Type A	215	323	386
	Type R	192	292	328

Fig. 3 Dimensions for GFED fastening.

4. DESIGN AND PRINCIPLE OF OPERATION

4.1. The design of GFED (pic.1 & pic.2).

4.1.1. GFED consists of a metal canister 3, in the form of a cylinder with holes on the side surface along the axial line (for GFED with radial gas outflaw) or on the end surface (for GFED with axial gas expiration). Holes in the canister are sealed with a sticker (ATTENTION - do not remove!). The charge of the gas-forming composition 6 is fixed inside the canister 3 with the help of a cassette 4. The filter 7 is fixed on the cassette 4. The starting device 1 is screwed into the threaded hole of the cover 5 and sealed with a rubber ring.

4.2. Principle of operation.

When a control signal is triggered the starting device operates initiating combustion of the charge. The products of combustion of the charge pass through the filter, bleed through holes in the housing 3 into the protected volume and eliminate the burning inside of it.

5. INSTALLATION on OBJECT

5.1. GFED is placed directly on the protected object (in the room, on the vehicle, in the body of the power unit, etc.) and mounted on the ceiling or wall of the object. Installation of the device is carried out by means of mounting brackets (Fig. 3). For installation, 2 holes with a diameter of 8 mm are drilled under a plastic dowel of 8 mm to a depth of 48 mm in accordance with the dimensions indicated on (Fig.3). Mounting brackets are fixed with screws with a diameter of 5 mm and a length of 35 mm. On metal structures, the mounting bracket is fixed with 2 screws M5x30, 2 spring washers 5 and 2 nuts M5 through 2 grooves 6 mm. (Metalware is not included into the set of delivery).

5.2. For faster creation of a fire-extinguishing gas concentration near the fire source, it is desirable to install generators, directing their nozzle holes into the zone of possible fire occurrence.

5.3. Before connecting GFED after its installation on the object, it is necessary to remove the plug from the hole in the cover 5 and screw the starting device 1. Sealing of the connection is carried out by means of a rubber ring included in the device set.

5.4. When designing electric lines for starting GFED if an electrical igniter is used as a starting device there should be measures to avoid the occurrence of interference currents which may lead to GFED unauthorized operation.

6. SAFETY MEASURES

6.1. Persons admitted to work with GFED must study the content of this manual, the instructions printed on the body (label) and comply with their requirements.

6.2. When starting GFED, ensure guaranteed absence of people in the high-temperature (more than 75° C) zone of the gas jet.

6.3. Fire-extinguishing gas is a low-toxic product, which in fire-extinguishing concentration is classified as low-hazard under normal conditions. Not classified as hazardous to the environment.

6.4. When GFED starts up, persons present in the room must leave it. Re-entry into the room is allowed only after its ventilation.

6.5. If it is necessary to carry out urgent works during ventilation, use an insulating gas mask.

6.6. It is prohibited to:

- place GFED near the heaters;
- connect GFED to the electrical circuit of the start-up system before its regular installation at the facility;
- operate GFED without the installed starting device;
- perform any kind of work with GFED connected to the electrical start circuit;

6.7. If it is necessary to carry out welding or other works in the area of GFED location it is necessary to protect it from sparks, flame or high temperature.

7. MAINTENANCE

7.1. Once a month GFED, which is on standby mode, is subject to external inspection. The absence of visible external disturbances (completeness, reliability of fastening), changes, mechanical damages, absence of breaks and external damages of an electric igniter circuit or other starting device is controlled.

GFED having damages are subject to check at the manufacturer.

7.2. After visual inspection if the device is suitable for operation, check the integrity of the trigger circuit of the activator using the remote control of the fire automation system or a special device.

Attention! The test current should be no more than 0.1 A.

8. STORAGE and TRANSPORTATION

8.1. Conditions for storage of GFED shall correspond to climatic execution U category 2.1 according to GOST 15150 - 69 in a temperature range from -45°C up to +40° C.

8.2. GFED in packaged form is transported by all modes of transport without limitation of distance in accordance with the requirements applicable to each mode of transport. When transporting by air the GFED are transported as class 9 goods of hazard according to GOST 19433-88. Hazard class for transportation of individual charges of gas-forming composition – 4.1 according to GOST 19433-88. When transporting GFED, the starting device is not screwed into the GFED housing, but is packed together with the GFED. The hole for the starting device in the body of the GFED is closed with a plastic stopper.

9. WARRANTY

9.1. The manufacturer guarantees compliance of GFED with the technical requirements TU 2829-036-69229785-2018 if the consumer follows conditions of transportation, storage and operation.

9.2. Warranty period of storage of GFED in original packaging – 1 year from the date of issue.
9.3. The warranty period of GFED – 2 years from the date of sale.
9.4. Service life of GFED – 10 years from the date of sale.

The manufacturer reserves the right to make changes in the design that do not impair the characteristics of the product.

10. ACCEPTANCE CERTIFICATE

The device of gas fire extinguishing

«Eol 2A025»	☐	«Eol 2R025»	☐
«Eol 2A050»	☐	«Eol 2R050»	☐
«Eol 3A100»	☐	«Eol 3R100»	☐

batch № _____, complies with technical requirements

TU 28.29-036-69229785-2018 and is found fit for use.

Date of issue

☐

Signature _____ QCD

MANUFACURER:
“Extinguishing Systems” Ltd.
196641, 9B, Doroga na Metallostroy Str., Sain-Petersburg, Russia.
Phone/ Fax: (812) 676 70 44
E-mail: spt@epotos.ru